OPTIQUE

Orbita Pendant Nano Linear Fixture

Specification Submittal

Our elegant Orbita Pendant features rotatable light engines, making it possible to select direct, indirect or anything in between. Configurable in different lengths, and with multiple light segments. Suspend these pendants to draw attention to areas in commercial lighting applications or as soft room illumination when used in a residential setting.

Project Name:

Project Location:

Fixture Type:

SKUs:

Features & Benefits

- Available in multiple lengths and up to three segments
- 360° light rotation to effortlessly fine-tune the direction of the light
- Superior color rendering
- High R9 and R13 values
- 2-step MacAdam ellipse for unparalleled quality and consistency
- UL Listed and Title 24

Dimensions

See next page for more details.

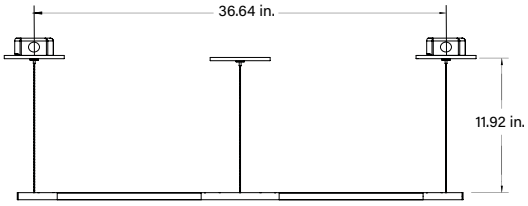

NOTE: Shown using 12 in. light engines

System Builder Choose one option for each step.

Prefix	Configuration	Output	CCT	Canopy	Finish	Length
OP-SFU-ORBITA-		L3				
	PEN1 Ceiling mount pendant fixture made up of one segment. 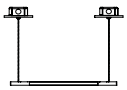 **PEN2** Ceiling mount pendant fixture made up of two segments. 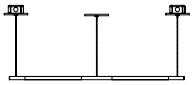 **PEN3** Ceiling mount pendant fixture made up of three segments. 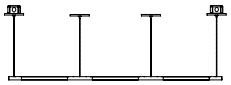	**L3** 2700K - 201 lm/ft (4W) 3000K - 210 lm/ft (4W) 3500K - 225 lm/ft (4W) 4200K - 236 lm/ft (4W)	**2700K** **3000K** **3500K** **4200K**	**500** 5 in. Diameter canopy *For mounting with the use of a junction box* **500D** 5 in. Diameter canopy *For mounting with an included Driver that fits most 4-inch junction box.*	**STB** Satin Brass **MBL** Powder Coated Matte Black *RAL 9005*	**12** 12.56 in. light engine *Lumen output: 263 per segment* **18** 18.32 in. light engine *Lumen output: 394 per segment* **24** 24.08 in. light engine *Lumen output: 525 per segment* **36** 35.61 in. light engine *Lumen output: 788 per segment* – *Total length is limited to 10 ft. (120 in.)* – *If fixture has more than one section, it will use the chosen length for each section*

(844) 454-2910 | solutions@optique-lighting.com | optique-lighting.com

Specifications subject to change without notice.

OPTIQUE

Orbita Pendant
Nano Linear Fixture

Specification Submittal

Dimensions

PEN 1

12 in. Light Engine

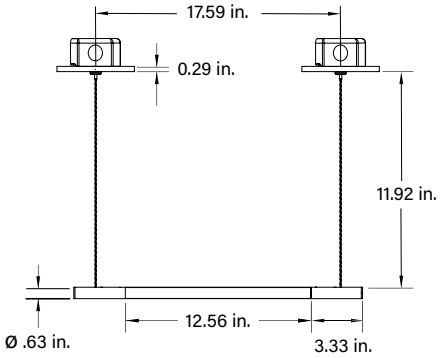

18 in. Light Engine

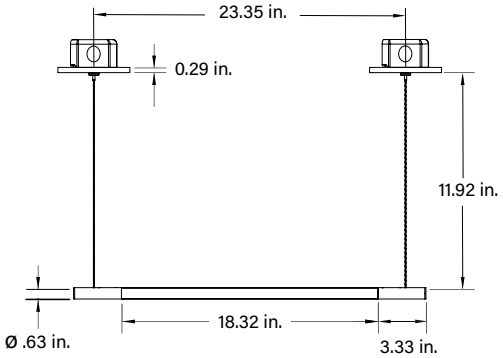

24 in. Light Engine

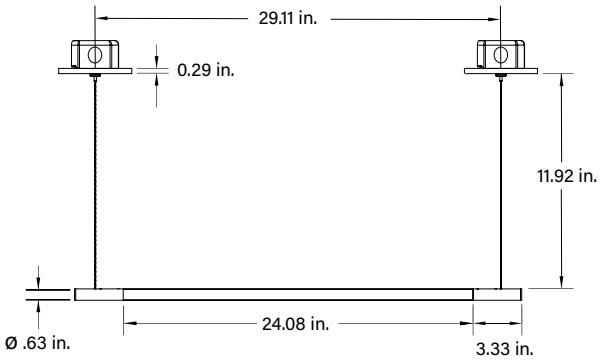

36 in. Light Engine

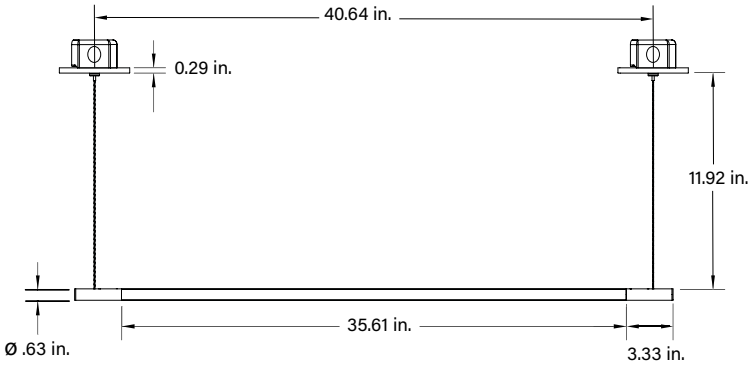

OPTIQUE

Orbita Pendant
Nano Linear Fixture

Specification Submittal

Dimensions

PEN 2

12 in. Light Engine

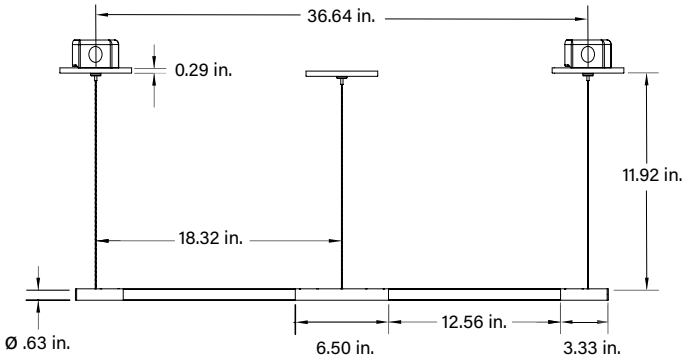

18 in. Light Engine

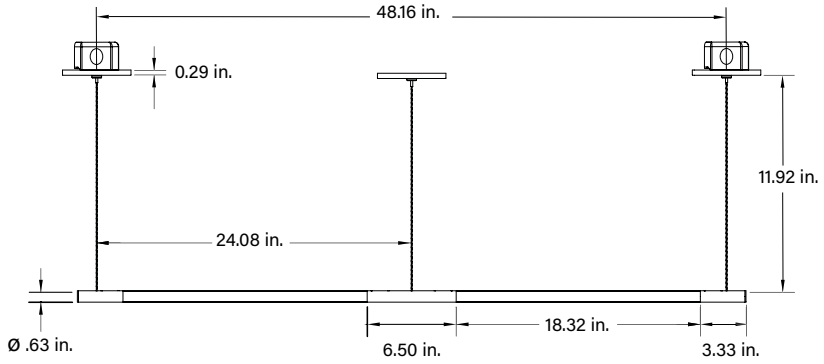

24 in. Light Engine

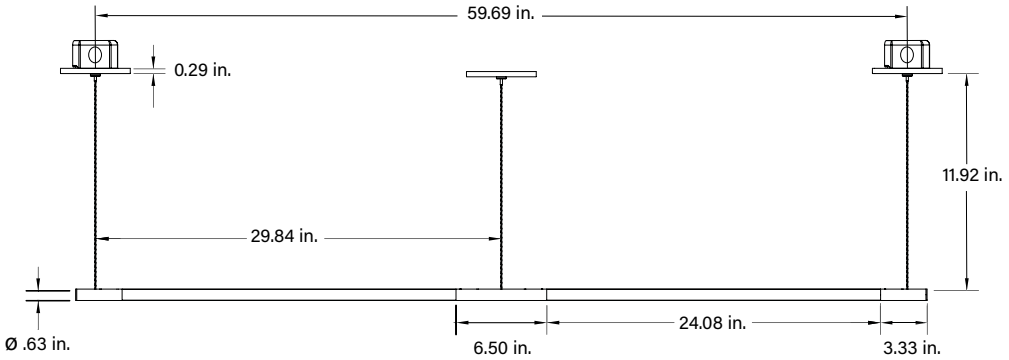

OPTIQUE

Orbita Pendant
Nano Linear Fixture

Specification Submittal

Dimensions

36 in. Light Engine

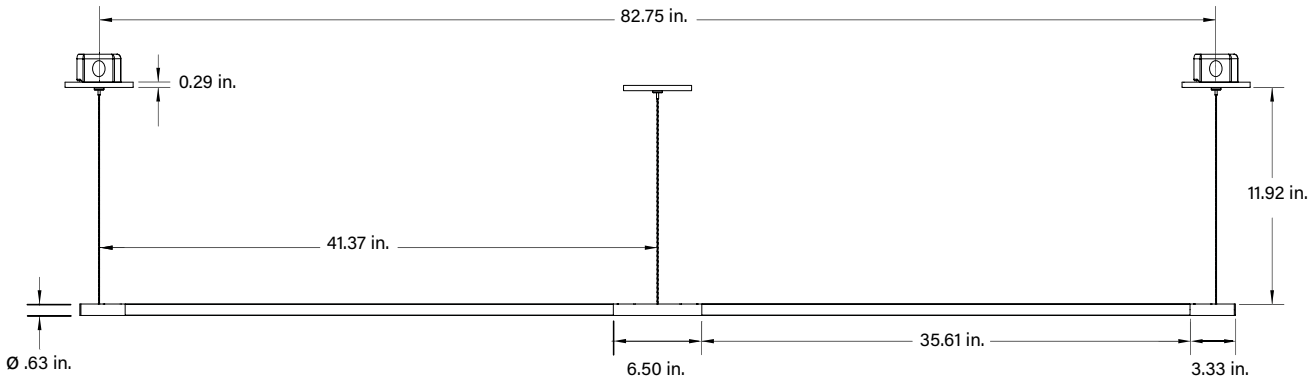

PEN 3

12 in. Light Engine

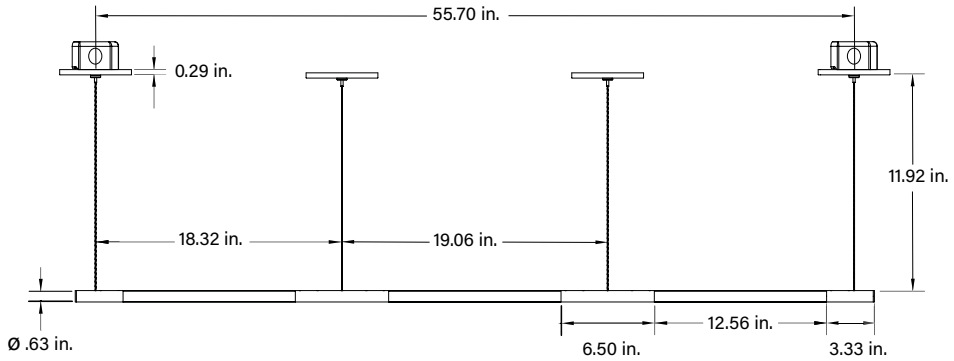

18 in. Light Engine

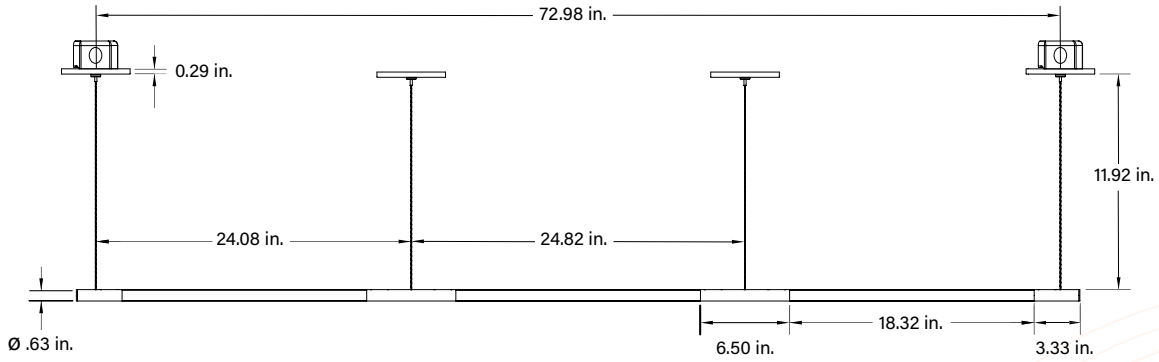

(844) 454-2910 | solutions@optique-lighting.com | optique-lighting.com

Specifications subject to change without notice.

OPTIQUE

Orbita Pendant
Nano Linear Fixture

Specification Submittal

Dimensions

24 in. Light Engine

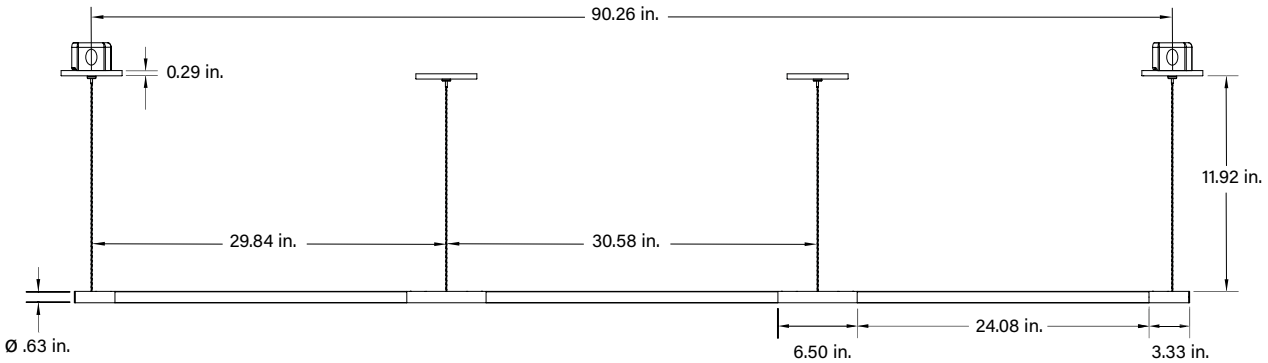

36 in. Light Engine

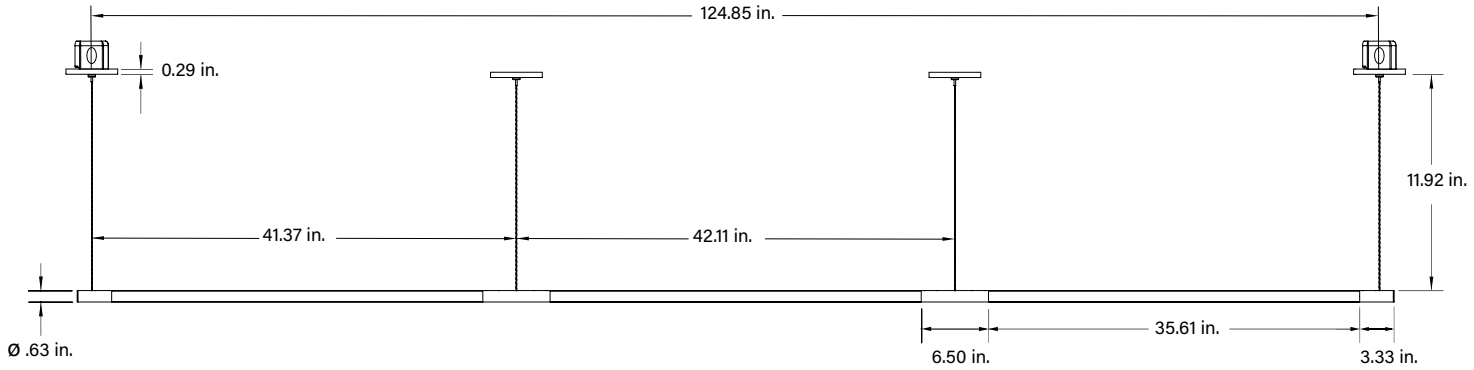

Light Engines

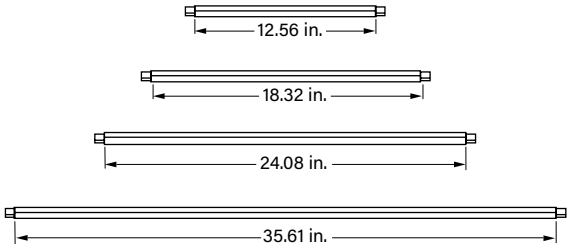

Canopy

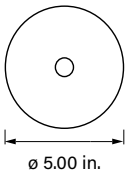

NOTE: ø = diameter

(844) 454-2910 | solutions@optique-lighting.com | optique-lighting.com

Specifications subject to change without notice.

OPTIQUE

Orbita Pendant
Nano Linear Fixture

Specification Submittal

Power Supply

Features

- Input Voltage: 90-130VAC / 180-240VAC
- High Efficiency: up to 89% ; PF>0.95
- Suitable for dry or damp location use.
- Compatible with 0-10V and 1-10V Dimmers.

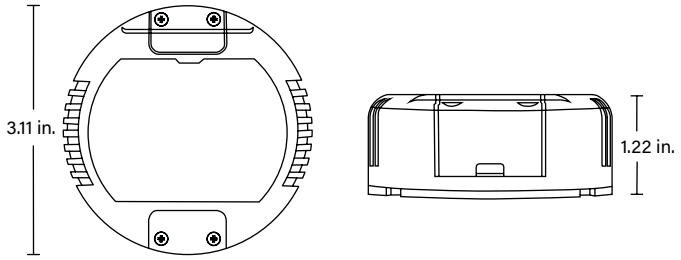

Diagram Connection

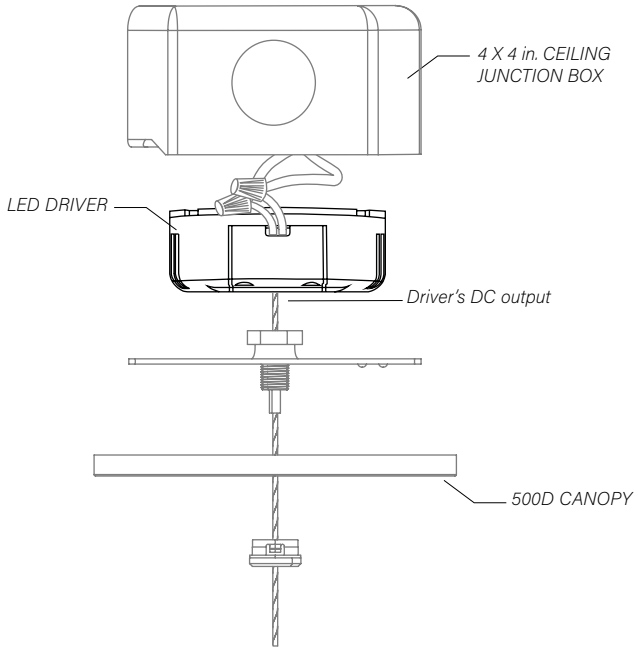

*Note: If Canopy 500 is selected, Optique Lighting will specify a universal remote driver that supports 120-277.

OPTIQUE

Orbita Pendant Nano Linear Fixture

Specification Submittal

Photometry

1 ft., 3000K Orbita Nano Linear Fixture

LUMEN SUMMARY

Zone	Lumens	% Fixture
0° – 15°	9.13 lm	4.35%
0° - 30°	34.6 lm	16.48%
0° - 45°	70.7 lm	33.67%
0° - 60°	110 lm	52.38%
0° - 75°	147 lm	70.00%
0° - 90°	175 lm	83.33%

ANGULAR DISTRIBUTION 0 – 90°

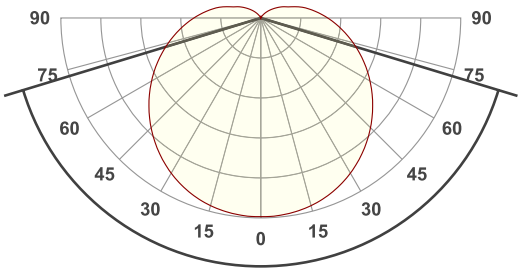

146.2°

FOOT CANDLES

Distance	Foot Candles
1’	43 fcd
1.5’	19 fcd
2’	11 fcd
2.5’	7 fcd
3’	5 fcd
4’	3 fcd
5’	2 fcd
6’	1 fcd
9’	1 fcd
12’	0 fcd

BEAM ANGLE

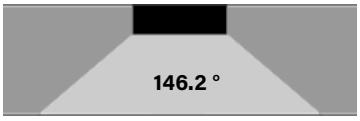

COLOR VECTOR GRAPHIC

		Graphic shifts (%)	
Hue Bin	R_f	Chroma	Hue
1	96	1%	-2%
2	98	1%	0%
3	95	1%	2%
4	95	2%	2%
5	95	4%	2%
6	92	6%	1%
7	92	5%	-3%
8	92	4%	-3%
9	94	2%	-3%
10	95	0%	-3%
11	96	0%	1%
12	94	3%	1%
13	96	3%	0%
14	94	5%	-2%
15	95	2%	-2%
16	92	3%	-6%

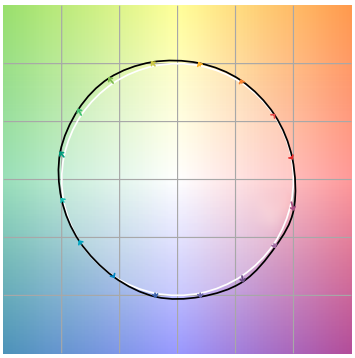

Reference Test

(844) 454-2910 | solutions@optique-lighting.com | optique-lighting.com

Specifications subject to change without notice.