OPTIQUE

Millwork - Recessed - 60° Mounting Angle

Specification Submittal

Project Name:

Project Location:

Fixture Type:

SKUs:

Millwork - Recessed - 60° Mounting Angle is designed for woodwork and millwork applications and provides a refined, recessed luminaire tailored for shelves, desks, and counters. Designed to fit precisely into 3/8 in. wide by 3/8 in. deep milled slots in hardwood, plywood, and MDF. Its angled back ensures effortless installation, while the retention ridges inside the profile firmly secure the light engine in place, delivering a polished and professional result that fills the milled slot perfectly.

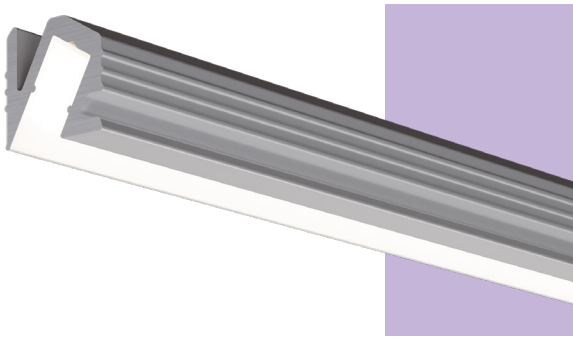

System Builder for Fixture

Prefix	Location	Output	CCT	Finish	Mounting	Length	Lead	Lead Length
OP-REC-MW60	I	L1		ALU	NM		1LEAD	
			White Light **2700K** **3000K** **3500K** **4000K**			**XXX** Length in 1 in. increments	*By default leads come out the end of the fixture.* *Finished fixtures are equipped with a **factory pre-wired end piece**, with the lead exiting from the **back** of the fixture.*	**XXX** 1-120 in.

Features & Benefits

- Complete fixture includes factory pre-wired end piece for easy and fast installation
- Flawless, continuous smooth glow of light with no inconsistencies
- Chamfered edged back effortlessly directs the channel into the milled slot, ensuring swift and hassle-free installation
- Retention ridges inside the profile securely hold the light engine in place, ensuring a smooth and straightforward installation
- External retention ridges grip the wood or particle board to securely hold the channel in place
- Create a precise 5/32 in. hole along the V-grooved drill guide for power access exactly where needed, or neatly route wires through the channel's end.
- Superior color rendering
- High R9 and R13 values
- 2-step MacAdam ellipse for unparalleled quality and consistency
- Complete UL Listed Luminaire

Dimensions

Fixture Cross Section

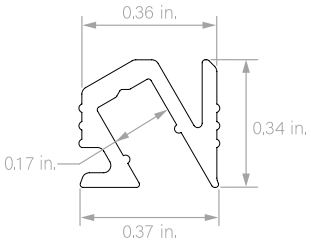

Fixtures are supplied with Optique's remote Universal power supply supporting 0-10, 1-10V, MLV, ELV dimming and voltage input from 100V-277V.

(844) 454-2910 | solutions@optique-lighting.com | optique-lighting.com

Specifications subject to change without notice.

OPTIQUE

Millwork - Recessed - 60° Mounting Angle

Specification Submittal

Fixture Configuration Upon Delivery

All fixtures are shipped **pre-configured for easy installation**. Each unit includes a **Factory Pre-Wired End Piece**, ensuring a clean and efficient wire management solution. This feature eliminates the need for additional wiring through the channel, allowing for a streamlined installation process.

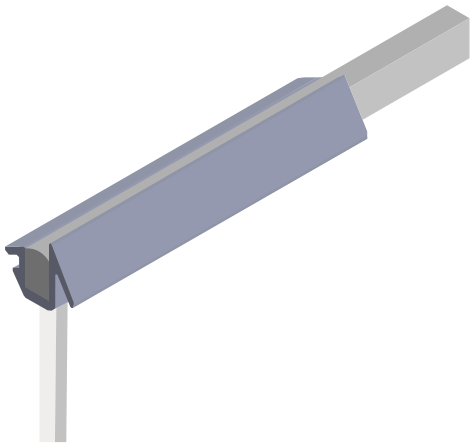

Factory Pre-Wired End Piece

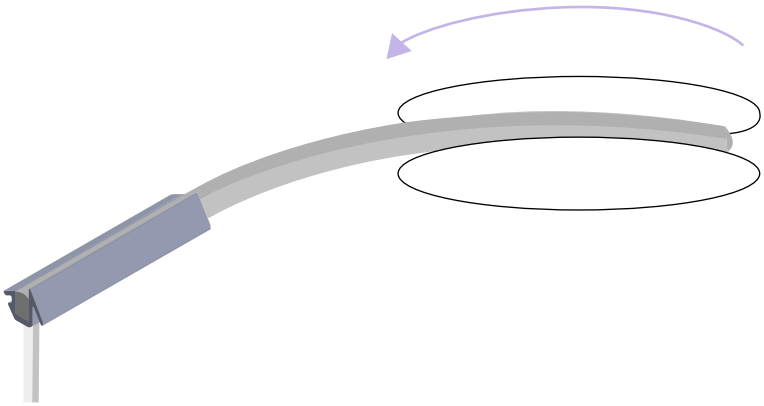

Light engine roll with Factory Pre-Wired End Piece

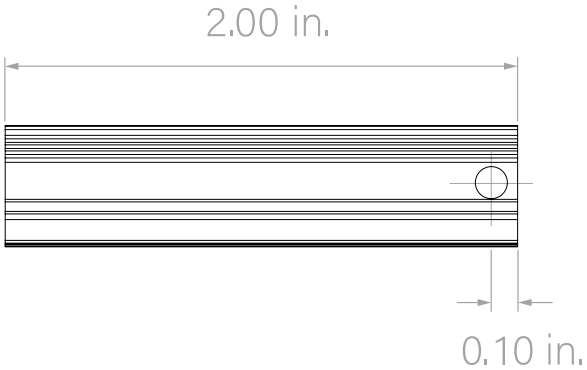

Factory Pre-Wired End Piece Back View Dimensions

OPTIQUE

Millwork - Recessed - 60° Mounting Angle

Specification Submittal

Output

Indoor

White Light

L-Level		L1
Lumens (per ft.)	**2700K**	122
	3000K	123
	3500K	133
	4000K	143
Wattage (per ft.)		3.4
Max Run Length* (ft.)		21.25
Closet Rated		✓

**Maximum individual fixture per power feed.*

Photometry

1 ft., 3000K Millwork - Recessed - 60° Mounting Angle - Fixture

LUMEN SUMMARY

Zone	Lumens	% Fixture
0° – 15°	8.94 lm	7.27%
0° - 30°	32.8 lm	26.66%
0° - 45°	64.2 lm	52.19%
0° - 60°	94.2 lm	76.58%
0° - 75°	115 lm	93.49%
0° - 90°	121 lm	98.37%

ANGULAR DISTRIBUTION 0 – 90°

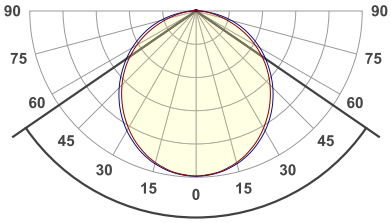

111°

COLOR VECTOR GRAPHIC

		Graphic shifts (%)	
Hue Bin	R_f	Chroma	Hue
1	97	0%	0%
2	98	1%	-1%
3	96	1%	-1%
4	96	-1%	-2%
5	98	-1%	1%
6	97	2%	1%
7	96	1%	1%
8	95	3%	0%
9	96	2%	0%
10	96	2%	-1%
11	96	2%	0%
12	94	3%	-2%
13	95	1%	-4%
14	94	3%	-4%
15	95	1%	-2%
16	92	2%	-6%

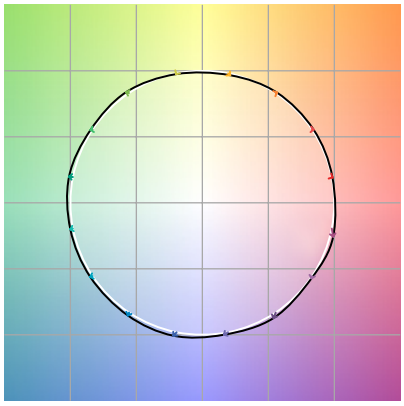

Reference Test

OPTIQUE

Millwork - Recessed - 60° Mounting Angle

Specification Submittal

System Builder for Channel Only

Prefix	End Caps	Finish	Mounting	Length
OP-RMW60	NA	ALU	NM	

XXX
Length in 1 in. increments

System Builder for Light Engine Only

Prefix	Location	Output	Voltage	CCT	Length	# of Leads	Lead Length 1	Lead Length 2
OP-01-N04MMSB	O	100	24V					

White Light
2700K
3000K
3500K
4000K

XXX
Length in 1 in. increments

1LEAD
One lead

2LEAD
Two leads
(one at each end)

By default leads come out the end of the Light engine as shown in the image

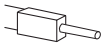

XXX
1-120 in.

XXX
1-120 in.
Optional

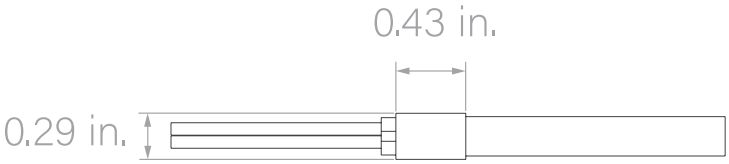

Light Engine with Sleeve

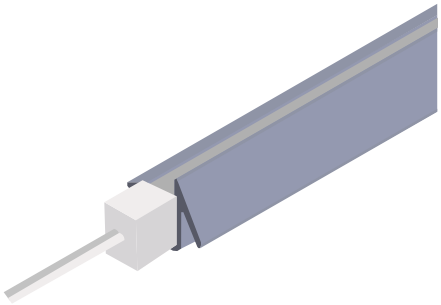

Light Engine Sleeve stays outside the channel

OPTIQUE

Millwork - Recessed - 60° Mounting Angle

Specification Submittal

Stock SKU's for Channel

SKU	Description
OP-RMW60-NA-ALU-NM-48	Millwork - Recessed - 60 Degree Mounting Angle, Anodized Aluminum Finish, 48 in. length

Stock SKU's for Light Engine

SKU	Description
OP-01-N04MMSB-O-100LM-24V-2700K-25	25 in. NanoNeon - 100 Lumens per foot - 2700K - 24V
OP-01-N04MMSB-O-100LM-24V-3000K-25	25 in. NanoNeon - 100 Lumens per foot - 3000K - 24V
OP-01-N04MMSB-O-100LM-24V-3500K-25	25 in. NanoNeon - 100 Lumens per foot - 3500K - 24V
OP-01-N04MMSB-O-100LM-24V-4000K-25	25 in. NanoNeon - 100 Lumens per foot - 4000K - 24V
OP-01-N04MMSB-O-100LM-24V-2700K-37	37 in. NanoNeon - 100 Lumens per foot - 2700K - 24V
OP-01-N04MMSB-O-100LM-24V-3000K-37	37 in. NanoNeon - 100 Lumens per foot - 3000K - 24V
OP-01-N04MMSB-O-100LM-24V-3500K-37	37 in. NanoNeon - 100 Lumens per foot - 3500K - 24V
OP-01-N04MMSB-O-100LM-24V-4000K-37	37 in. NanoNeon - 100 Lumens per foot - 4000K - 24V
OP-01-N04MMSB-O-100LM-24V-2700K-48	48 in. NanoNeon - 100 Lumens per foot - 2700K - 24V
OP-01-N04MMSB-O-100LM-24V-3000K-48	48 in. NanoNeon - 100 Lumens per foot - 3000K - 24V
OP-01-N04MMSB-O-100LM-24V-3500K-48	48 in. NanoNeon - 100 Lumens per foot - 3500K - 24V
OP-01-N04MMSB-O-100LM-24V-4000K-48	48 in. NanoNeon - 100 Lumens per foot - 4000K - 24V
OP-01-N04MMSB-O-100LM-24V-2700K-97	97 in. NanoNeon - 100 Lumens per foot - 2700K - 24V
OP-01-N04MMSB-O-100LM-24V-3000K-97	97 in. NanoNeon - 100 Lumens per foot - 3000K - 24V
OP-01-N04MMSB-O-100LM-24V-3500K-97	97 in. NanoNeon - 100 Lumens per foot - 3500K - 24V
OP-01-N04MMSB-O-100LM-24V-4000K-97	97 in. NanoNeon - 100 Lumens per foot - 4000K - 24V
OP-01-N04MMSB-O-100LM-24V-2700K-125	125 in. NanoNeon - 100 Lumens per foot - 2700K - 24V
OP-01-N04MMSB-O-100LM-24V-3000K-125	125 in. NanoNeon - 100 Lumens per foot - 3000K - 24V
OP-01-N04MMSB-O-100LM-24V-3500K-125	125 in. NanoNeon - 100 Lumens per foot - 3500K - 24V
OP-01-N04MMSB-O-100LM-24V-4000K-125	125 in. NanoNeon - 100 Lumens per foot - 4000K - 24V
OP-01-N04MMSB-O-100LM-24V-2700K-196	1 spool of 16.4 ft. NanoNeon - 100 Lumens per foot - 2700K - 24V
OP-01-N04MMSB-O-100LM-24V-3000K-196	1 spool of 16.4 ft. NanoNeon - 100 Lumens per foot - 3000K - 24V
OP-01-N04MMSB-O-100LM-24V-3500K-196	1 spool of 16.4 ft. NanoNeon - 100 Lumens per foot - 3500K - 24V
OP-01-N04MMSB-O-100LM-24V-4000K-196	1 spool of 16.4 ft. NanoNeon - 100 Lumens per foot - 4000K - 24V