OPTIQUE

Millwork - Surface Mount - 90° Mounting Angle - Up/Down - 1/2 in. Shelves

Specification Submittal

Project Name:

Project Location:

Fixture Type:

SKUs:

Millwork - Surface Mount - 90° Mounting Angle - Up/Down - 1/2 in. Shelves is designed for woodwork and millwork applications and is a luminaire specifically crafted for 1/2 in. shelving, delivering both upward and downward illumination from the back of the shelf. Engineered for effortless installation with a notched drill guide for power access and retention ridges that securely hold the light engine in place.

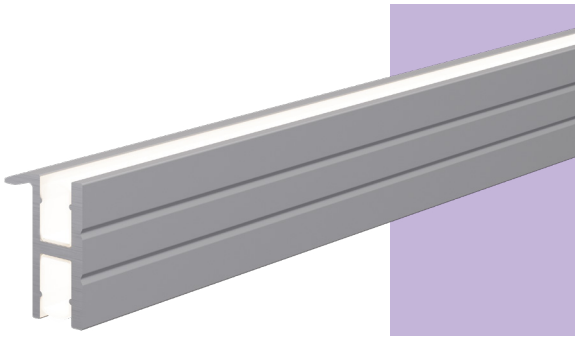

System Builder for Fixture

Prefix	Location	Output	CCT	Finish	Mounting	Length	Lead	Lead Length
OP-SFU-MW90UD-050	I	L1		ALU	NM		1LEAD	
			White Light **2700K** **3000K** **3500K** **4000K**			**XXX** Length in 1 in. increments	*By default leads come out the end of the fixture.* *Finished fixtures are equipped with a **factory pre-wired end piece**, with the lead exiting from the **side** of the fixture.*	**XXX** 1-120 in.

Features & Benefits

- Complete fixture includes factory pre-wired end piece for easy and fast installation
- Flawless, continuous smooth glow of light with no inconsistencies
- Designed specifically for 1/2 in. shelves
- Flanges conceal rough edges and create a clean, polished appearance
- Retention ridges inside the profile securely hold the light engine in place, ensuring a smooth and straightforward installation
- Create a precise 5/32 in. hole along the V-grooved drill guide for power access exactly where needed, or neatly route wires through the channel's end.
- Superior color rendering
- High R9 and R13 values
- 2-step MacAdam ellipse for unparalleled quality and consistency
- Complete UL Listed Luminaire

Dimensions

Fixture Cross Section

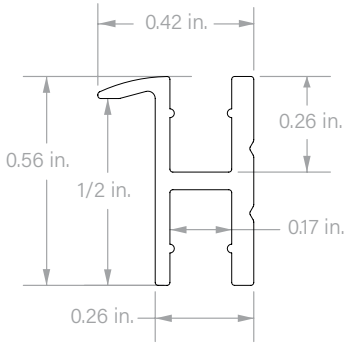

Fixtures are supplied with Optique's remote Universal power supply supporting 0-10, 1-10V, MLV, ELV dimming and voltage input from 100V-277V.

(844) 454-2910 | solutions@optique-lighting.com | optique-lighting.com

Specifications subject to change without notice.

OPTIQUE

Millwork - Surface Mount - 90° Mounting Angle - Up/Down - 1/2 in. Shelves

Specification Submittal

Fixture Configuration Upon Delivery

All fixtures are shipped **pre-configured for easy installation**. Each unit includes a **Factory Pre-Wired End Piece**, ensuring a clean and efficient wire management solution. This feature eliminates the need for additional wiring through the channel, allowing for a streamlined installation process.

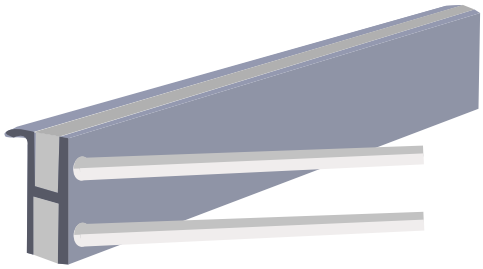

Factory Pre-Wired End Piece

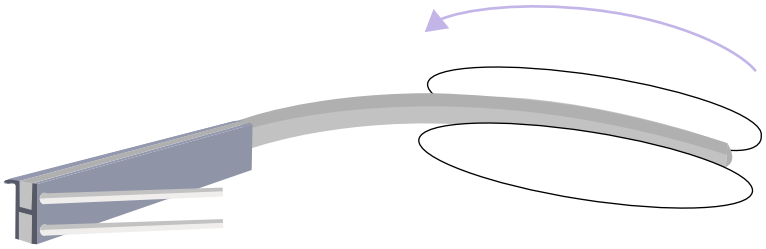

Light engine roll with Factory Pre-Wired End Piece

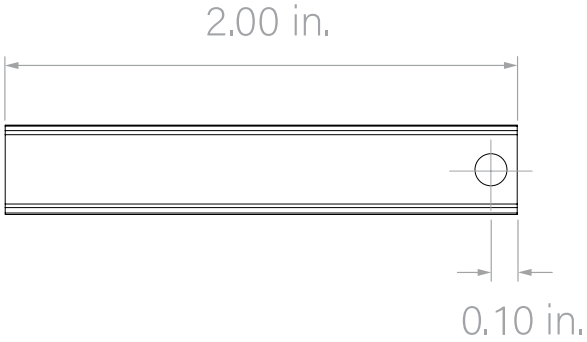

Factory Pre-Wired End Piece Back View Dimensions

OPTIQUE

Millwork - Surface Mount - 90° Mounting Angle - Up/Down - 1/2 in. Shelves

Specification Submittal

Output

Indoor

White Light

L-Level		L1
Lumens (per ft.)	**2700K**	244
	3000K	246
	3500K	266
	4000K	288
Wattage (per ft.)		6.8
Max Run Length* (ft.)		14.11
Max Run Length* (ft.) (1 Driver per row)		21.25
Closet Rated		✓

**Maximum individual fixture per power feed.*

Photometry

1 ft., 3000K Millwork Surface Mount - 90° Mounting Angle - Fixture

LUMEN SUMMARY

Zone	Lumens	% Fixture
0° – 15°	8.94 lm	7.27%
0° - 30°	32.8 lm	26.66%
0° - 45°	64.2 lm	52.19%
0° - 60°	94.2 lm	76.58%
0° - 75°	115 lm	93.49%
0° - 90°	121 lm	98.37%

ANGULAR DISTRIBUTION 0 – 90°

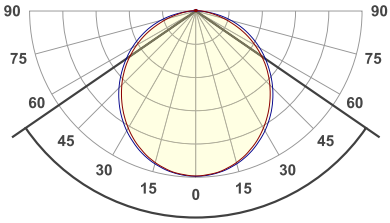

111°

COLOR VECTOR GRAPHIC

		Graphic shifts (%)	
Hue Bin	R_f	Chroma	Hue
1	97	0%	0%
2	98	1%	-1%
3	96	1%	-1%
4	96	-1%	-2%
5	98	-1%	1%
6	97	2%	1%
7	96	1%	1%
8	95	3%	0%
9	96	2%	0%
10	96	2%	-1%
11	96	2%	0%
12	94	3%	-2%
13	95	1%	-4%
14	94	3%	-4%
15	95	1%	-2%
16	92	2%	-6%

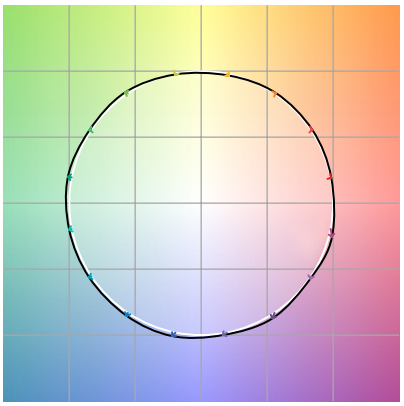

Reference Test

OPTIQUE

Millwork - Surface Mount - 90° Mounting Angle - Up/Down - 1/2 in. Shelves

Specification Submittal

System Builder for Channel Only

Prefix	End Caps	Finish	Mounting	Length
OP-SFU-MW90UD-050	NA	ALU	NM	

XXX
Length in 1 in. increments

System Builder for Light Engine Only

Prefix	Location	Output	Voltage	CCT	Length	# of Leads	Lead Length 1	Lead Length 2
OP-01-N04MMSB	O	100	24V					

White Light
2700K
3000K
3500K
4000K

XXX
Length in 1 in. increments

1LEAD
One lead

2LEAD
Two leads
(one at each end)

By default leads come out the end of the Light engine as shown in the image

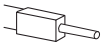

XXX
1-120 in.

XXX
1-120 in.
Optional

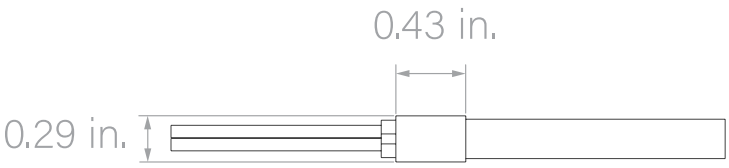

Light Engine with Sleeve

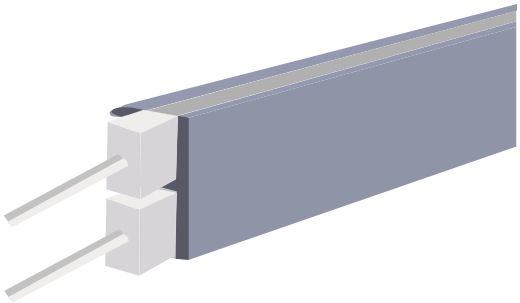

Light Engine Sleeve stays outside the channel

OPTIQUE

Millwork - Surface Mount - 90° Mounting Angle - Up/Down - 1/2 in. Shelves

Specification Submittal

Stocked SKU's for Channel

SKU	Description
OP-SMW90UD-050-NA-ALU-NM-48	Millwork - Surface Mount - 90 Degree Mounting Angle - Up/Down - 1/2 in. Shelves, Anodized Aluminum Finish, 48 in. length

Stock SKU's for Light Engine

SKU	Description
OP-01-N04MMSB-O-100LM-24V-2700K-25	25 in. NanoNeon - 100 Lumens per foot - 2700K - 24V
OP-01-N04MMSB-O-100LM-24V-3000K-25	25 in. NanoNeon - 100 Lumens per foot - 3000K - 24V
OP-01-N04MMSB-O-100LM-24V-3500K-25	25 in. NanoNeon - 100 Lumens per foot - 3500K - 24V
OP-01-N04MMSB-O-100LM-24V-4000K-25	25 in. NanoNeon - 100 Lumens per foot - 4000K - 24V
OP-01-N04MMSB-O-100LM-24V-2700K-37	37 in. NanoNeon - 100 Lumens per foot - 2700K - 24V
OP-01-N04MMSB-O-100LM-24V-3000K-37	37 in. NanoNeon - 100 Lumens per foot - 3000K - 24V
OP-01-N04MMSB-O-100LM-24V-3500K-37	37 in. NanoNeon - 100 Lumens per foot - 3500K - 24V
OP-01-N04MMSB-O-100LM-24V-4000K-37	37 in. NanoNeon - 100 Lumens per foot - 4000K - 24V
OP-01-N04MMSB-O-100LM-24V-2700K-48	48 in. NanoNeon - 100 Lumens per foot - 2700K - 24V
OP-01-N04MMSB-O-100LM-24V-3000K-48	48 in. NanoNeon - 100 Lumens per foot - 3000K - 24V
OP-01-N04MMSB-O-100LM-24V-3500K-48	48 in. NanoNeon - 100 Lumens per foot - 3500K - 24V
OP-01-N04MMSB-O-100LM-24V-4000K-48	48 in. NanoNeon - 100 Lumens per foot - 4000K - 24V
OP-01-N04MMSB-O-100LM-24V-2700K-97	97 in. NanoNeon - 100 Lumens per foot - 2700K - 24V
OP-01-N04MMSB-O-100LM-24V-3000K-97	97 in. NanoNeon - 100 Lumens per foot - 3000K - 24V
OP-01-N04MMSB-O-100LM-24V-3500K-97	97 in. NanoNeon - 100 Lumens per foot - 3500K - 24V
OP-01-N04MMSB-O-100LM-24V-4000K-97	97 in. NanoNeon - 100 Lumens per foot - 4000K - 24V
OP-01-N04MMSB-O-100LM-24V-2700K-125	125 in. NanoNeon - 100 Lumens per foot - 2700K - 24V
OP-01-N04MMSB-O-100LM-24V-3000K-125	125 in. NanoNeon - 100 Lumens per foot - 3000K - 24V
OP-01-N04MMSB-O-100LM-24V-3500K-125	125 in. NanoNeon - 100 Lumens per foot - 3500K - 24V
OP-01-N04MMSB-O-100LM-24V-4000K-125	125 in. NanoNeon - 100 Lumens per foot - 4000K - 24V
OP-01-N04MMSB-O-100LM-24V-2700K-196	1 spool of 16.4 ft. NanoNeon - 100 Lumens per foot - 2700K - 24V
OP-01-N04MMSB-O-100LM-24V-3000K-196	1 spool of 16.4 ft. NanoNeon - 100 Lumens per foot - 3000K - 24V
OP-01-N04MMSB-O-100LM-24V-3500K-196	1 spool of 16.4 ft. NanoNeon - 100 Lumens per foot - 3500K - 24V
OP-01-N04MMSB-O-100LM-24V-4000K-196	1 spool of 16.4 ft. NanoNeon - 100 Lumens per foot - 4000K - 24V